TECHNICAL DATA

Three Phase Electric Motors - Cast Iron Frame
HE30 200 L-6 IE2
18.5 kW / 25 Cv
980 RPM

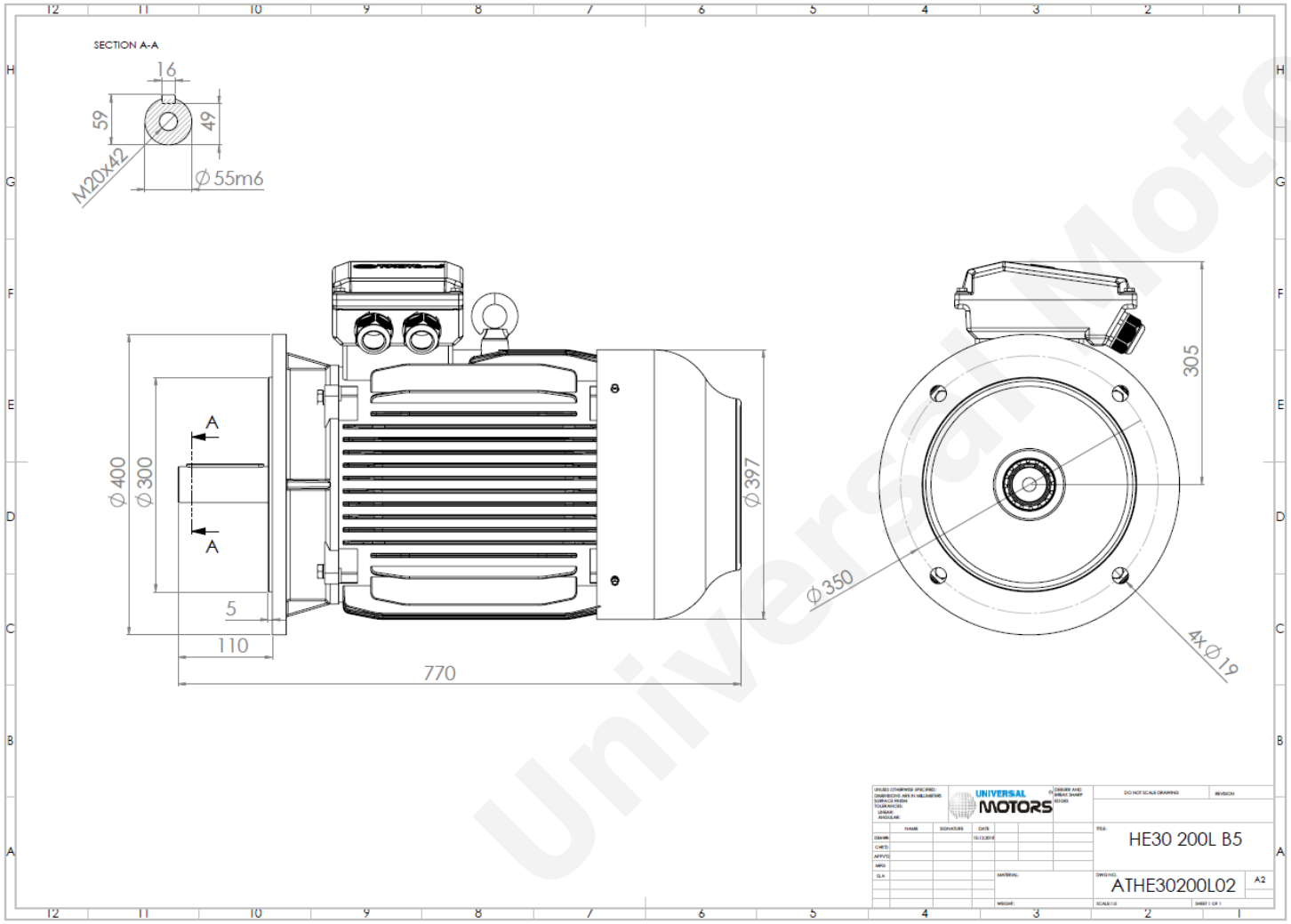

Motor type:	**HE30 200 L-6 IE2**
Output:	**18.5 kW / 25 Cv**
Speed (min^{-1}):	**980 RPM**
Frequency:	**50 Hz**
Voltage:	**400 V**
Current:	**36.5 A**
Power factor (Cos Ø):	**0.81**
Poles:	**6**
Insulation class:	**F**
Temperature rise Class:	**B**
Efficiency 50%:	**90.1 %**
Efficiency 75%:	**90.9 %**
Efficiency 100%:	**90.4 %**
Torque:	**180 N.m**
Tstarting/Tnominal:	**2.1**
Istarting/Inominal:	**7.2**
Tmaximum/Tnominal:	**2.1**
Noise:	**62 Db(A)**
Weight:	**234 Kg**
Bearing DE:	**6312 C3**
Bearing NDE:	**6312 C3**

Regime - S1 **Altitude - 1000m** **Environment Temperature - 40ºC**

* References applied only in the UK

CONTACTS:

UNIVERSAL MOTORS
Rua de São Brás,745
4480-782 VILA DO CONDE

Tel: +351 252 299 080
Fax: +351 252 299 089
Mail: geral@universalmotors.pt

Universal Motors